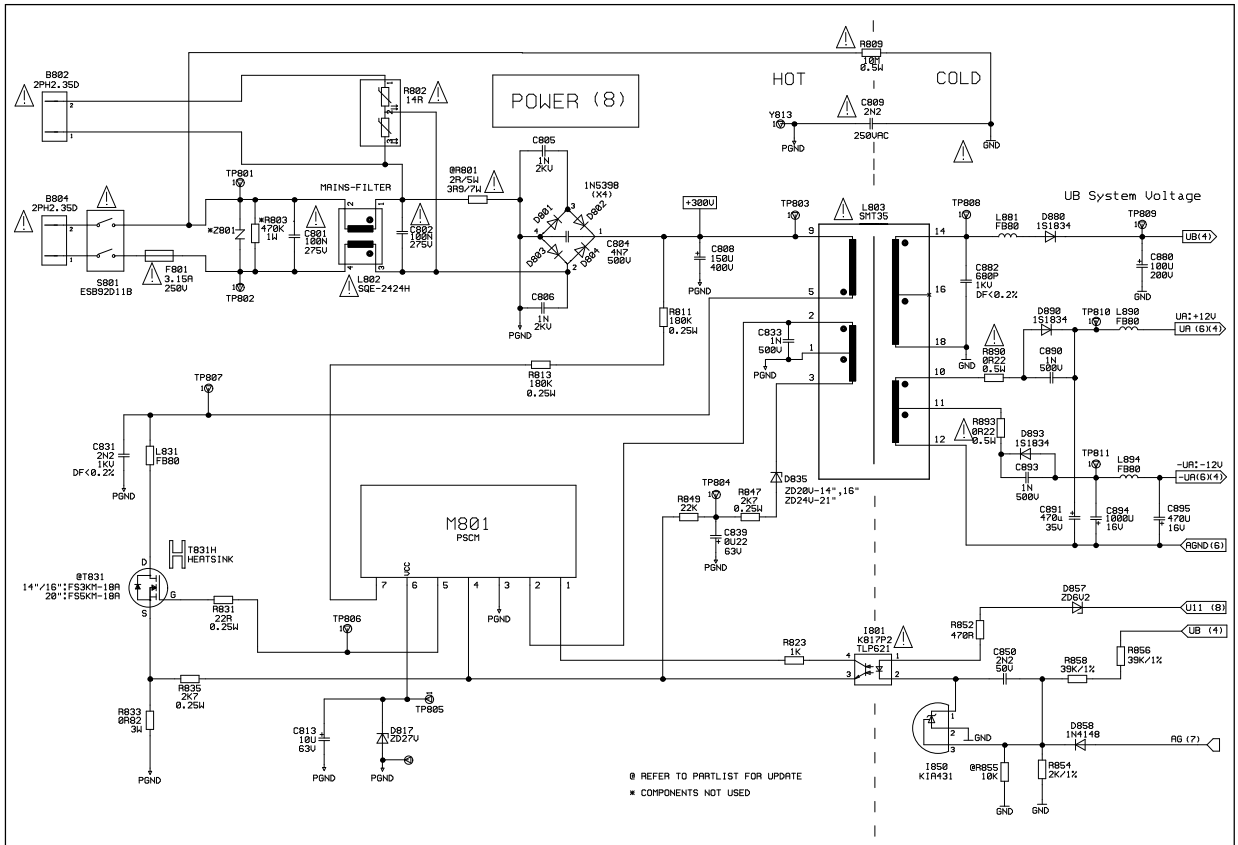

DS Multimedia Pte Ltd	Drawing : DT984PWR	Index	Date
	DT984 POWER SUPPLY CIRCUIT	VER 0.0	11 MAY 2000